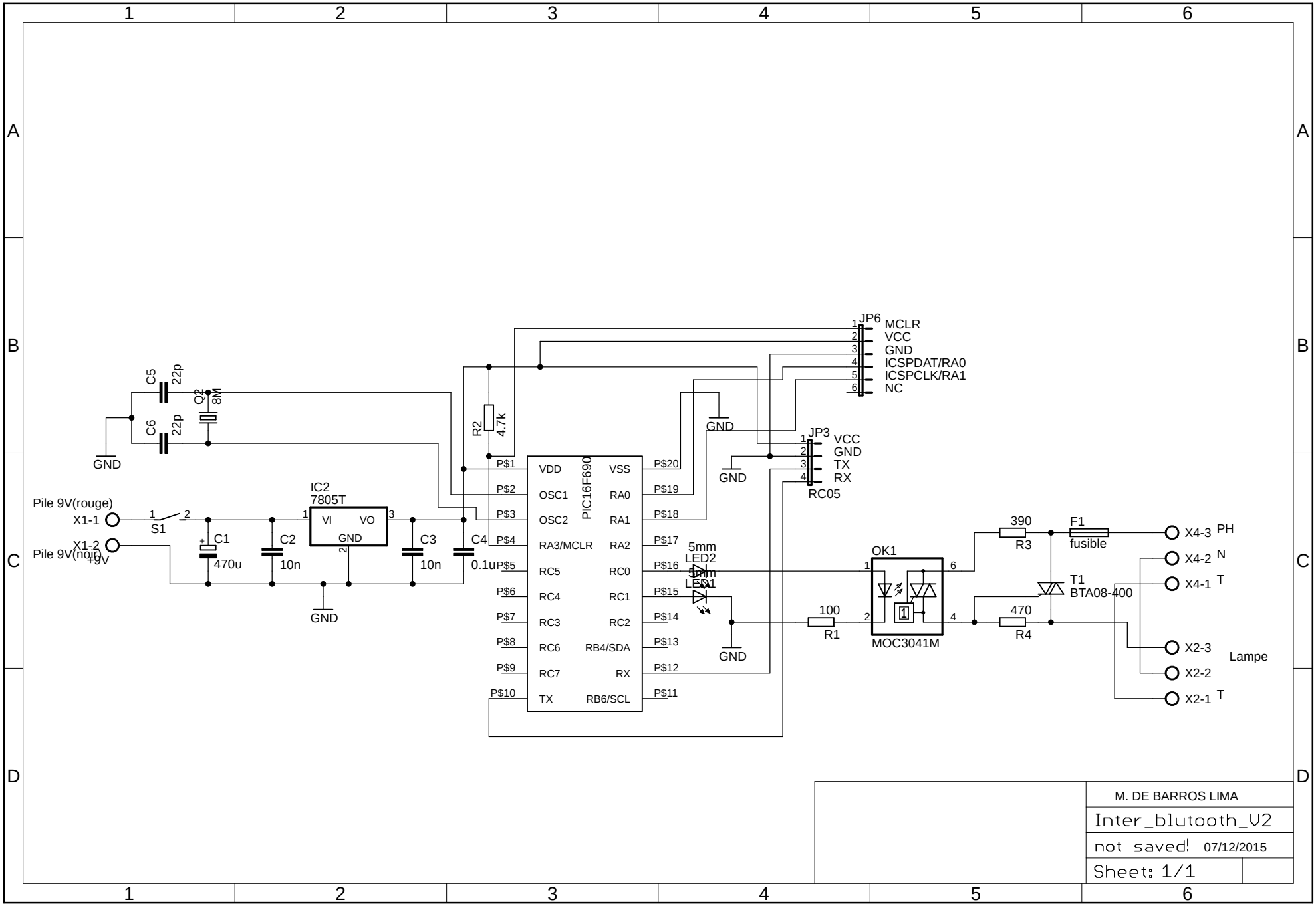
JP6
MCLR
VCC
GND
ICSPDAT/RA0
ICSPCLK/RA1
NC
JP3
VCC
GND
TX
RX
RC05
C5
22p
C6
22p
Q2
8M
R2
4.7k
GND
Pile 9V(rouge)
X1-1
Pile 9V(noir)
X1-2
+9V
S1
C1
470u
C2
10n
IC2
7805T
VI
VO
GND
C3
10n
C4
0.1u
PIC16F690
VDD
OSC1
OSC2
RA3/MCLR
RC5
RC4
RC3
RC6
RC7
TX
VSS
RA0
RA1
RA2
RC0
RC1
RC2
RB4/SDA
RX
RB6/SCL
P$1
P$2
P$3
P$4
P$5
P$6
P$7
P$8
P$9
P$10
P$20
P$19
P$18
P$17
P$16
P$15
P$14
P$13
P$12
P$11
5mm
LED2
5mm
LED1
OK1
MOC3041M
100
R1
390
R3
470
R4
F1
fusible
T1
BTA08-400
X4-3 PH
X4-2 N
X4-1 T
X2-3
X2-2
X2-1 T
Lampe
M. DE BARROS LIMA
Inter_blutooth_V2
not saved! 07/12/2015
Sheet: 1/1